USN | | | | | | | | | | | [22ME44]

FOURTH SEMESTER B.Tech EXAMINATION, MAY - 2024

DESIGNE OF MACHINE ELEMENTS-I

Time: 3 Hours **Maximum Marks: 100**

Instructions: i. Missing data may be suitably assumed.

ANSWER ALL QUESTIONS

		PART - A	**05 x02=10**		
1.	**a.**	List out any four standards used in the designing of machine elements.	L1	CO1	**02**
	b.	Define stress ratio and amplitude ratio.	L1	CO2	**02**
	c.	What do you mean by flange coupling?	L1	CO3	**02**
	d.	What is the purpose of keys used in the shaft?	L1	CO3	**02**
	e.	Define helix angle in the threads.	L1	CO4	**02**
		PART - B	**06 X 05=30**		
2.	**a.**	A steel saw blade 1 mm thick is bent into an arc of a circle of 500mm radius. Determine the flexural stress induced and the bending moment required to bend the blade which is 15 mm wide. Take E= 210GPa	L4	CO1	**05**
		OR			
	b.	Design a shaft to transmit 10kW of power at 200 rpm. The steel is made of C40. The deflection in the shaft is not to exceed 1° per meter length. Assume the Yield strength of shaft material as 431.5 MPa and Factor of safety as 3.	L4	CO1	**05**
3.	**a.**	Discuss the methods for reducing the stress concentration in the machine elements.	L2	CO2	**05**
		OR			
	b.	A steel rod is subjected to a tensile load which varies from 120 kN to 40 kN. Design the safe diameter of the rod using Soderberg diagram. Use FOS=2 and assume stress concentration factor as unity and correction factors for load, size and surface as 0.75,0.85 and 0.91 respectively. Assume yield strength of steel as 689.4 MPa and endurance strength as 427.6 MPa.	L4	CO2	**05**
4.	**a.**	Discuss on the properties of the shaft material.	L2	CO3	**05**
		OR			
	b.	Write a short on manufacturing methods and heat treatment of the shafts.	L2	CO3	**05**

JAIN (Deemed-to-be University) Learning Resource Centre Jain Global Campus

5.	**a.**	Discuss on the different types of welded joints in detail.	L2	CO4	**05**
		OR			
	b.	Write a short note on the uses of threaded screws.	L2	CO4	**05**
6.	**a.**	Write a short note on different types of threaded profiles used in power screws.	L2	CO5	**05**
		OR			
	b.	Prove that the efficiency of self-locking screws is less than 50%.	L3	CO5	**05**
7.	**a.**	Discuss on the factors that influence on the selection of appropriate value of factor of safety.	L3	CO1	**05**
		OR			
	b.	A point in a plate girder is subjected to a horizontal tensile stress of 100 MPa and vertical shear stress of 60 MPa Find the magnitude of principal stresses and its location.	L4	CO1	**05**
		PART - C		**06 X 10=60**	
8.	**a.**	A bar of rectangular section is subjected to an axial pull of 500 kN. Calculate its thickness if the allowable tensile stress in the bar is 200 MPa. 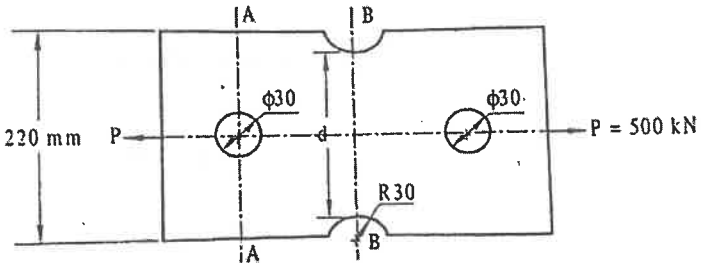 Fig. 8a	L4	CO2	**10**
		OR			
	b.	A flat plate is subjected to a tensile force of 5 kN as shown in the figure 8b. The plate material is a grey cast iron with ultimate tensile stress of 200 MPa. Determine the thickness of the plate. Assume FOS = 2.5. 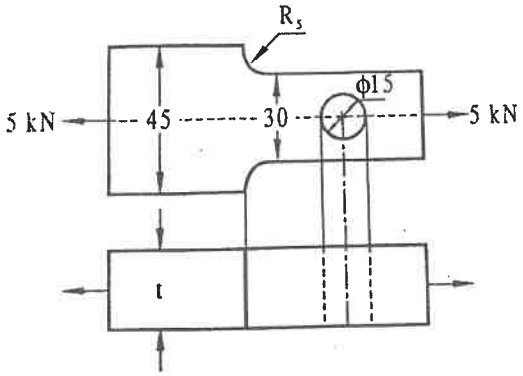 Fig. 8b	L4	CO2	**10**

9.	**a.**	Design a sleeve coupling to transmit 10 kW at 200 rpm. The allowable values of shear stresses and compressive stresses for the shaft and key material is 60 MPa and 130MPa respectively. Assume the allowable shear stress in the cast iron sleeve as 15 MPa.	L4	CO3	**10**
		OR			
	b.	In an axial flow rotary compressor, the shaft is subjected to a maximum torque of 1500 N-m and a maximum bending moment of 3000 N-m. Neglecting the axial load on the compressor shaft, determine the diameter of the compressor shaft. The shear stress in the shaft material is limited to 50 MPa. Also, design a hollow shaft for the above compressor taking inner diameter as 0.6 times the outer diameter. What percentage of material is saved in the hollow shaft? Assume minor shock condition	L4	CO3	**10**
10.	**a.**	With neat sketch, explain the terminologies of the threaded screw in detail.	L2	CO4	**10**
		OR			
	b.	Two circular plates with 2d and d as outer and inner diameters respectively are clamped together by means of a bolt as shown in the figure 10b. The yield stress of the bolt material is 400 MPa. The preload in the bolt is 5 kN and the external applied load on the bolted joint is 10 kN. Taking factor of safety = 2.5, E=210 GPa for plate and bolt material, determine the size of the bolt. 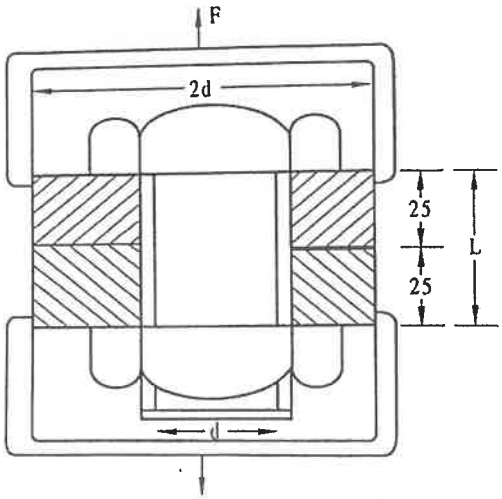 Fig. 10b	L4	CO4	**10**
11.	**a.**	Derive an equation to determine the torque required to lift the load on a square threaded screw.	L4	CO5	**10**
		OR			
	b.	A triple threaded power screw is used in the screw jack, has a nominal diameter of 50 mm and a pitch of 8 mm. The threads are	L4	CO5	**10**

		square shaped and the length of the nut is 48 mm. The screw jack is used to lift a load of 7.5 kN. The coefficient of friction at the threads is 0.12. Neglecting the collar friction, calculate the following **i.** Principal shear stress on the screw rod. **ii.** Transverse shear stresses in the screw and nut. Unit bearing pressure in the threads			
12.	**a.**	A welded connection is shown in the figure 12a. If the allowable stress is 100 MPa, determine the size of the weld. 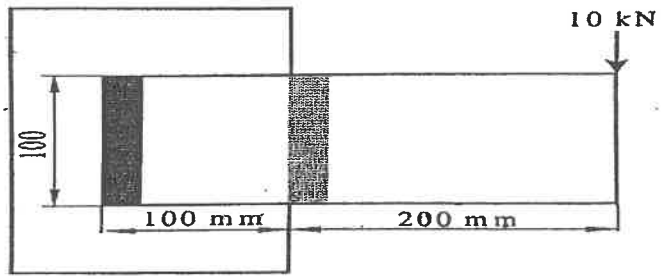 Fig. 12a	L4	CO4	**10**
		OR			
	b.	A line shaft rotating at 500 rpm is to transmit 600 kW. The allowable shear stress for the material of the shaft is 42 MPa. If the shaft carries a central load of 900 N and is simple supported between the bearing 3 m apart. Determine the diameter of the shaft. The maximum tensile or compressive stress is not to exceed 50 MPa.	L4	CO3	**10**
13.	**a.**	A machine slide weighing 20 kN is raised by a double start square threaded screw at the rate of 0.84 m/min. The coefficient of friction for screw and collar is 0.12 and 0.14 respectively. The outside diameter of the screw is 44 mm and pitch is 7 mm. The outside and inside diameters of the collar at the end of the screw are 58 mm and 32 mm respectively. Calculate the power required to drive slide, if the allowable shear stress in the screw is 30 MPa. Is the screw strong enough to sustain the load?	L4	CO5	**10**
		OR			
	b.	Discuss on different types of threaded profiles used in power screws with neat sketch.	L2	CO5	**10**